Kubitech
tehnică de frig

EVS 290/B ED

Air inlet temperature	°C	-18.0	Evaporating temperature	°C	-25.0
TD	°C	7.0	Refrigerant		R404A
Min number of units in room		1			

Heat exchanger	Standard	Casing	Standard
Motorfans feed	Standard	Fan motors	Standard
Defrost	Electric		

Capacity	kW	1.170			
TD	°C	7.0	Tot. air flow	m3/h	830

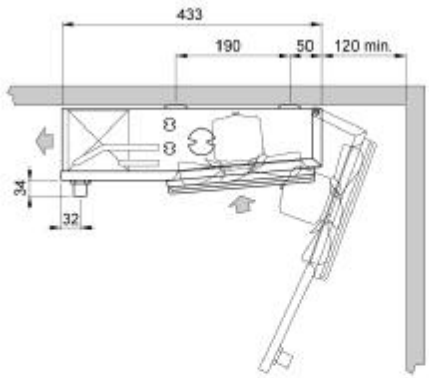

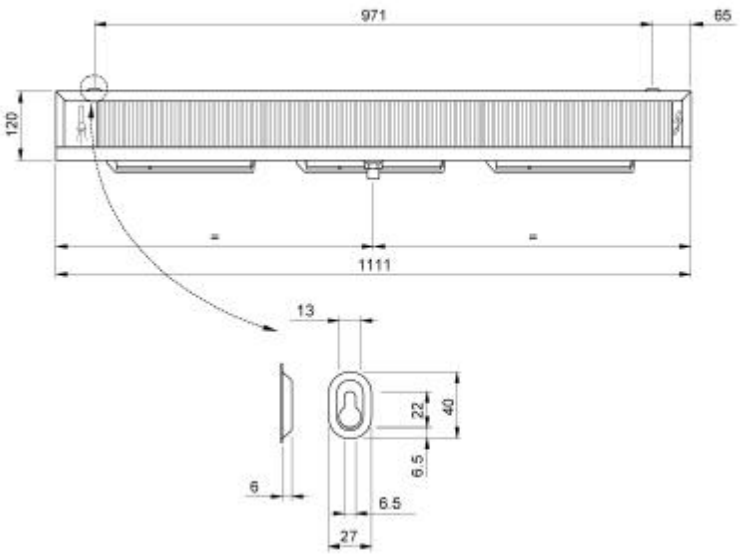

Weight	kg	11.400			
Internal surface	m2	0.71	External surface	m2	6.33
Input connection		1/2" SAE	Output connection		16 mm
Total circuit capacity	dm3	1.61	Fin spacing	mm	4.5 / 9
Drain connection		1/2" GAS			
Defrost	ED	Electric	Total absorption	Watt	1080
Fan	n.	3	Diameter	mm	200
Air flow	m3/h	830	Air throw	m	4.0
Feed	V	Standard	Fan speed	rpm	1300
Total absorption	A	1.05	Total power	Watt	159
Tot. Pres.S.Lev. 10 m.	dB(A)	37			